Case Study: A Tail of Two KC-135R's Decompression or In-flight Break-Up

Andy McMinn, M.S., P.E.
Metallurgical Air Safety Investigations
metasi@cox.net
405-831-5852

KC-135R S/N 57-1418
April 7, 1999 1630 CST

KC-135R S/N 57-1418
April 7, 1999 1630 CST

KC-135R S/N 57-1418 Mishap Site

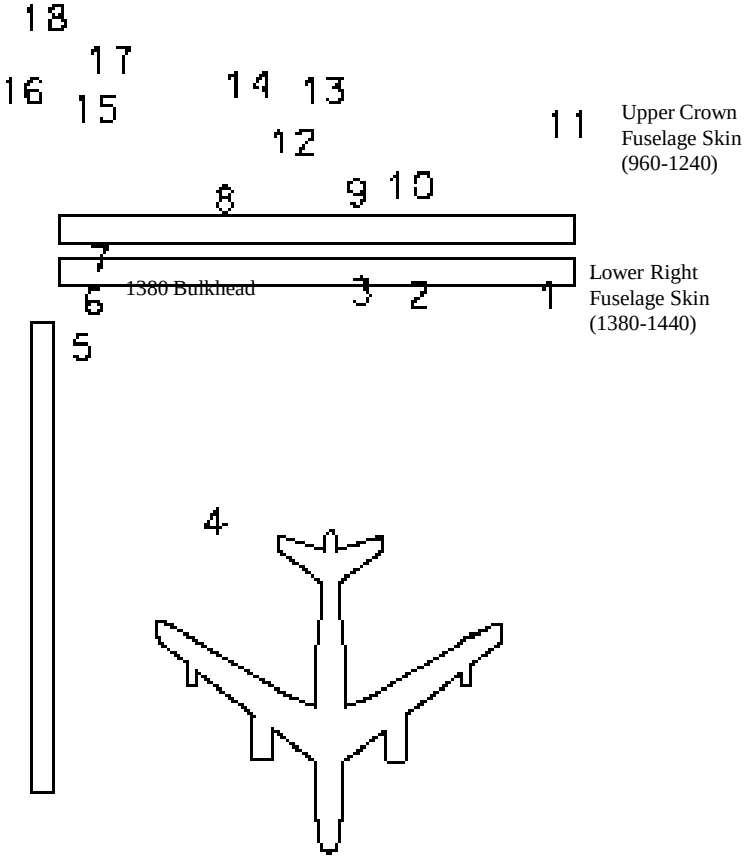

KC-135R
Body Primary Structure Diagram

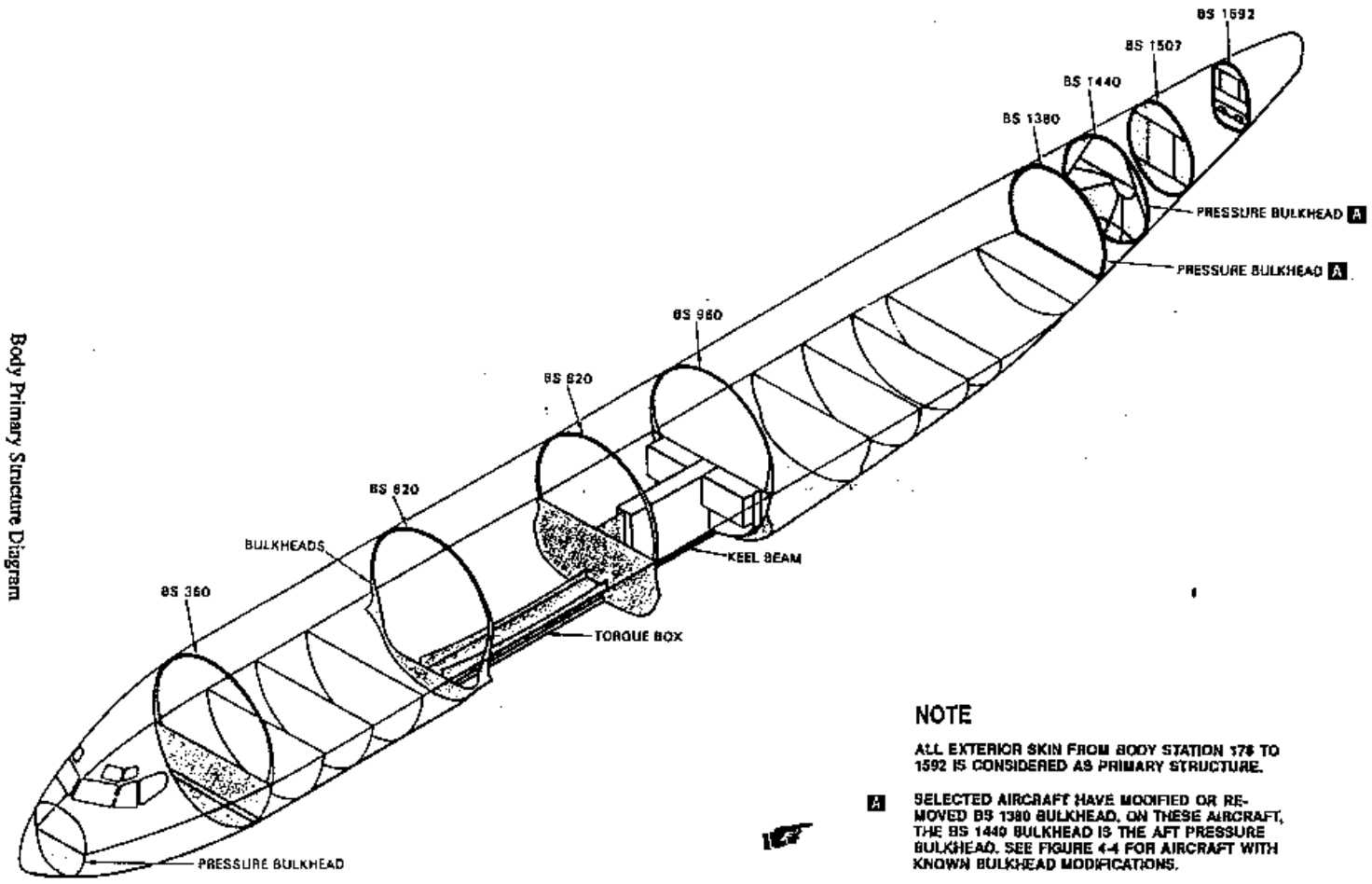

KC-135R S/N 57-1418
Aircraft Damage BS 960-BS 1440

Summary of Case Study One

On April 7, 1999, about 1630 central standard time, a USAF Boeing KC-135R Aerial Refueling Tanker, S/N 57-1418, was undergoing an engine run test in post-dock station George 4 at Tinker AFB, Oklahoma when the aircraft fuselage ruptured. The aircraft sustained major structural damage aft of BS 960. The test was part of programmed depot maintenance and two civilian aircraft mechanics were aboard the aircraft during the event. One mechanic sustained minor injuries to the lower leg the other was not injured.

The SIB determined that the probable cause of this mishap was the structural failure of the BS 1380 pressure bulkhead due to overpressure of the aircraft, which resulted from (1) the improper maintenance practices within Tinker's depot maintenance and (2) the failure of the Air Force's quality program (PAC) to detect and correct deficiencies in the Air Force's depot maintenance programs.

KC-135R S/N 63-8877

KC-135R S/N 63-8877
May 3, 2013 1448 LT

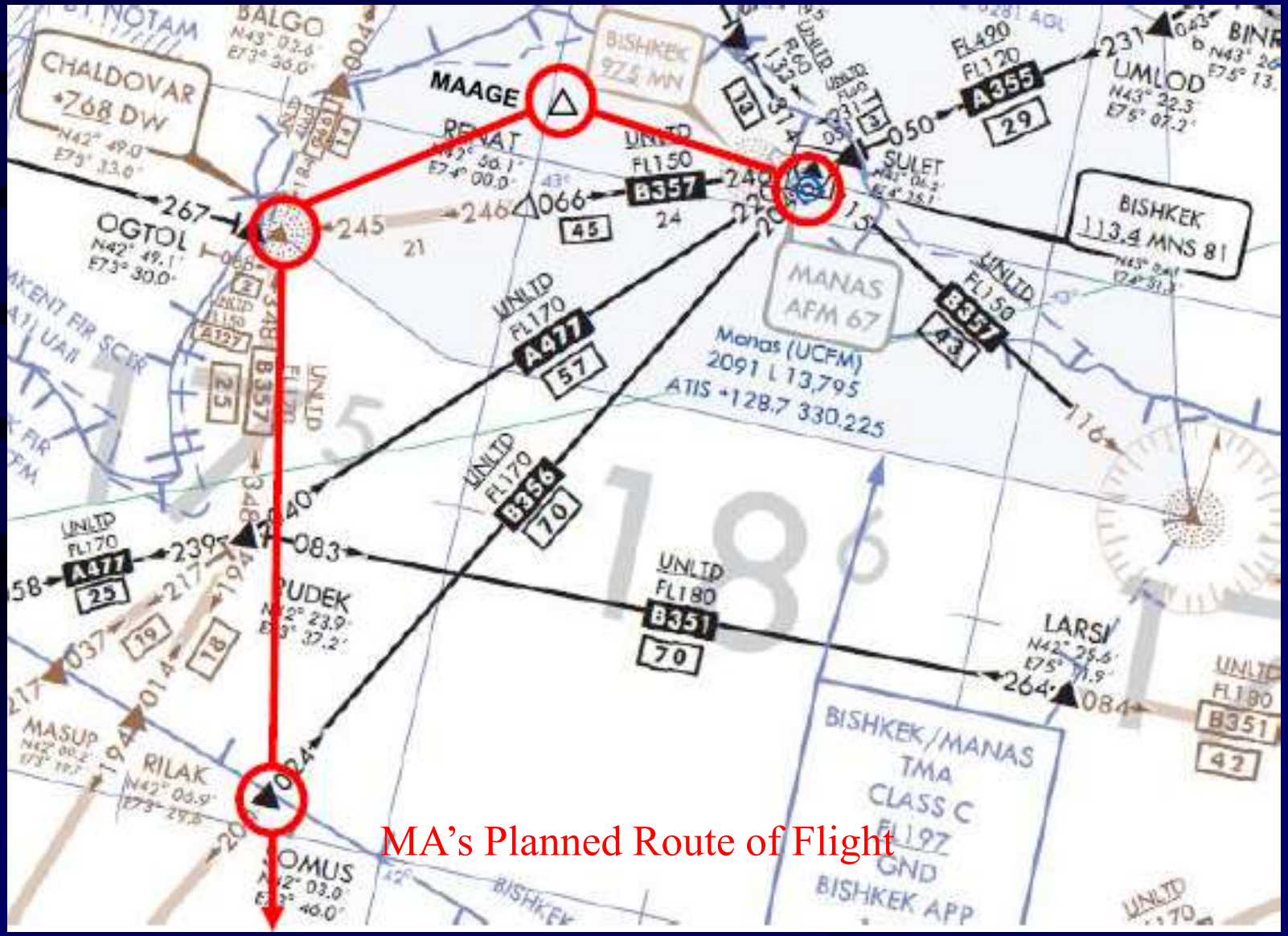

MA's Planned Route of Flight

KC-135R S/N 63-8877
May 3, 2013 1448 LT

MA's Flight Path RADAR Plot

KC-135R S/N 63-8877
May 3, 2013 1448 LT

KC-135R S/N 63-8877
May 3, 2013 1448 LT

KC-135R S/N 63-8877
May 3, 2013 1448 LT

KC-135R S/N 63-8877
May 3, 2013 1448 LT

KC-135R S/N 63-8877
May 3, 2013 1448 LT

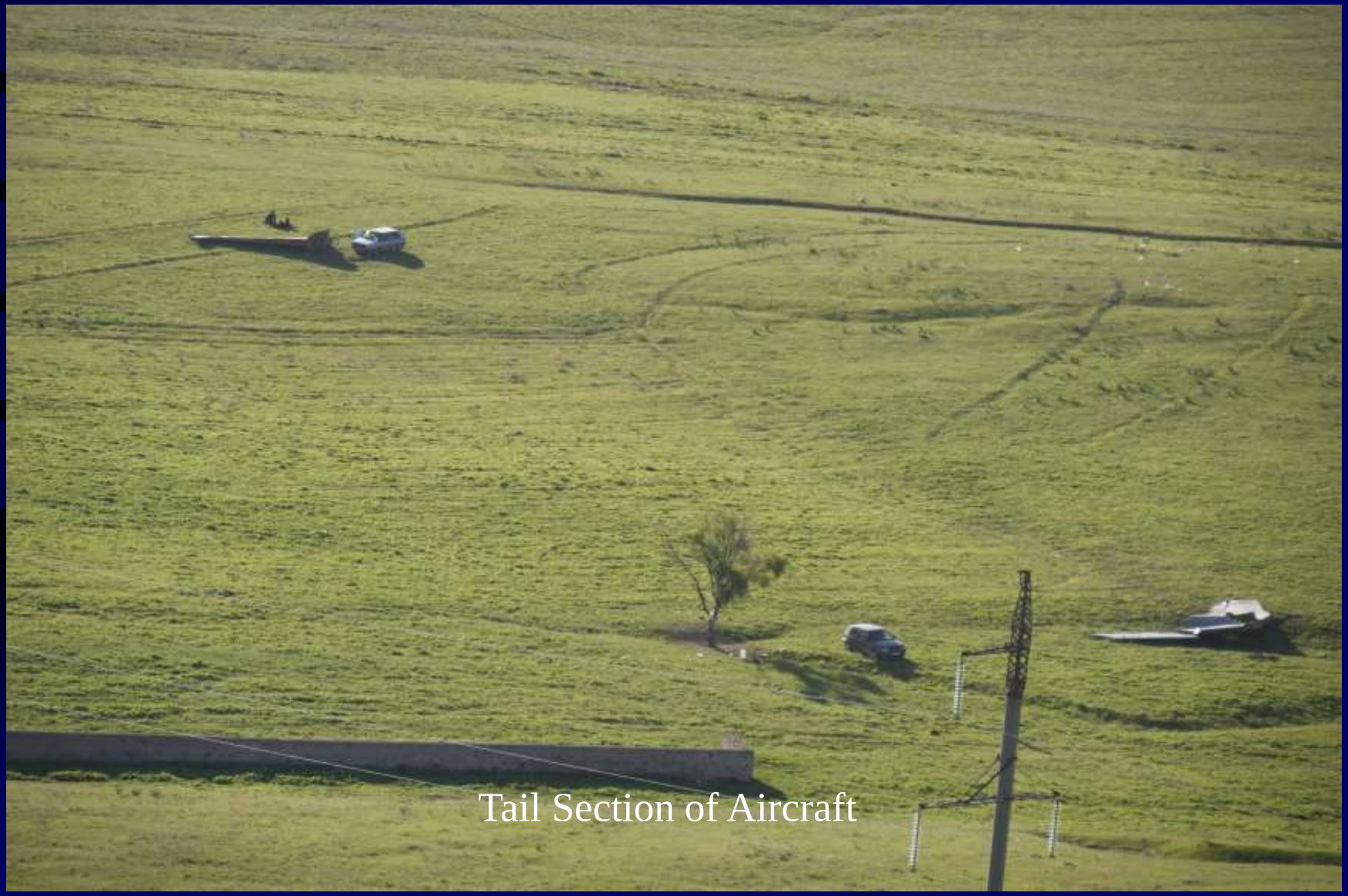

KC-135R S/N 63-8877
May 3, 2013 1448 LT

The fuselage is divided into four sections; Section 41, 43, 46, and 48 (Tech Data). These sections corresponded roughly to Crash Sites 1, 2, 3, and the tail section; respectively. The tail section separated just aft of BS 1440. Crash Sites 1, 2, & 3 contained fire damage whereas the tail section contained no fire damage.

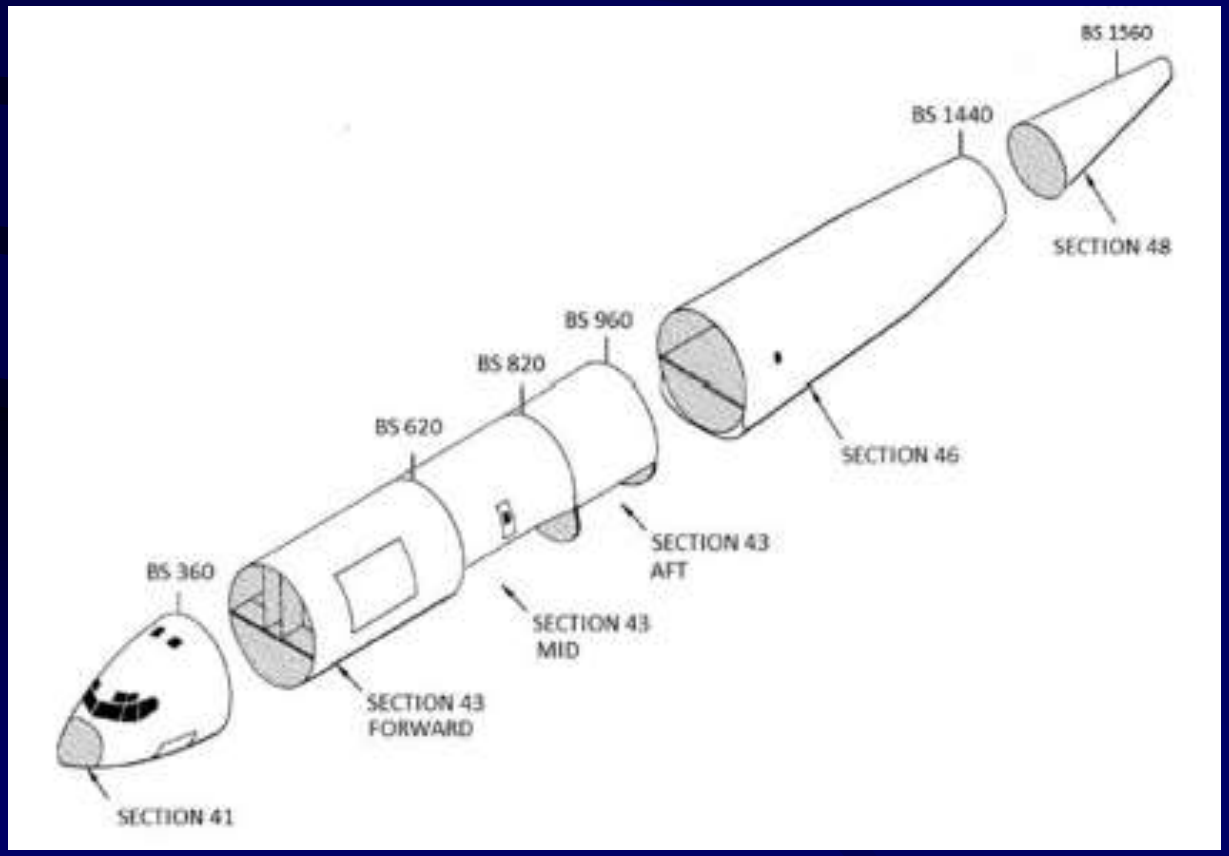

Investigating the In-flight Break-Up

Manufacturer/Certification Representative

- Design Limitations
- Structural Load Limits
- Performance Limitations
- Maintenance Requirements
- Failure Mode Identification

Types of Structural Failures

- Overstress
  - The part should have failed; i.e. more stress was put on the part than it was designed to withstand
- Understress
  - The part should not have failed; i.e. the part failed at a stress level within its operational limits
- Aerodynamic Overstess
  - The part failed by being locally stressed beyond its operational limits by aeroelastic phenomena; i.e. control reversal, divergence, or flutter

Overstress Structural Failures

- Pilot Induced Overstress
  - Aerobatics
  - Over reaction to turbulence or controlled flight departure
  - Improper recovery techniques or excessive landing loads
  - Any other operation outside the operational limits
- Weather Induced Overstress
  - Excessive gust loads (turbulence)
  - Wind Shear
- Wake Turbulence Induced Overstess
  - Downwash
  - Wing tip vortices

Understress Structural Failures

- Faulty Manufacture
  - Part did not meet the design specifications due to faulty manufacture; i.e. forging, machining, heat treatment, surface finishing, etc.
- Faulty Repair/Modification
  - Sometime during the parts' service life design specifications were altered due to faulty repair/modification; i.e. welding, plating, machining, assembly, etc.
- Reduction of Load Bearing Capacity
  - Sometime during the parts' service life load bearing capacity is reduced due to fatigue, corrosion, or wear

Aerodynamic Overstress Failures

- Control Reversal
  - Airfoil lacks torsional stiffness
  - Aircraft operated above V_{NE} (Never-Exceed Speed)
- Divergence
  - Airfoil lacks torsional stiffness
  - Aircraft operated above V_{MO} (Max. Operating Limit Speed)
- Flutter
  - Airfoil lacks torsional stiffness
  - Aircraft operated above V_{MO} (Max. Operating Limit Speed)
  - Inertia

Aerodynamic Overstress Failures

Divergence

- Airfoil lacks torsional stiffness
- Aircraft operated above V_{MO} (Max. Operating Limit Speed)

Evidence of Divergence

- Wing separating first
- Wing fails by overload in bending and torsion (leading edge up)

Unlike Control Reversal, which may provide some warning through decreased control effectiveness, divergence will result in catastrophic torsional wing failure.

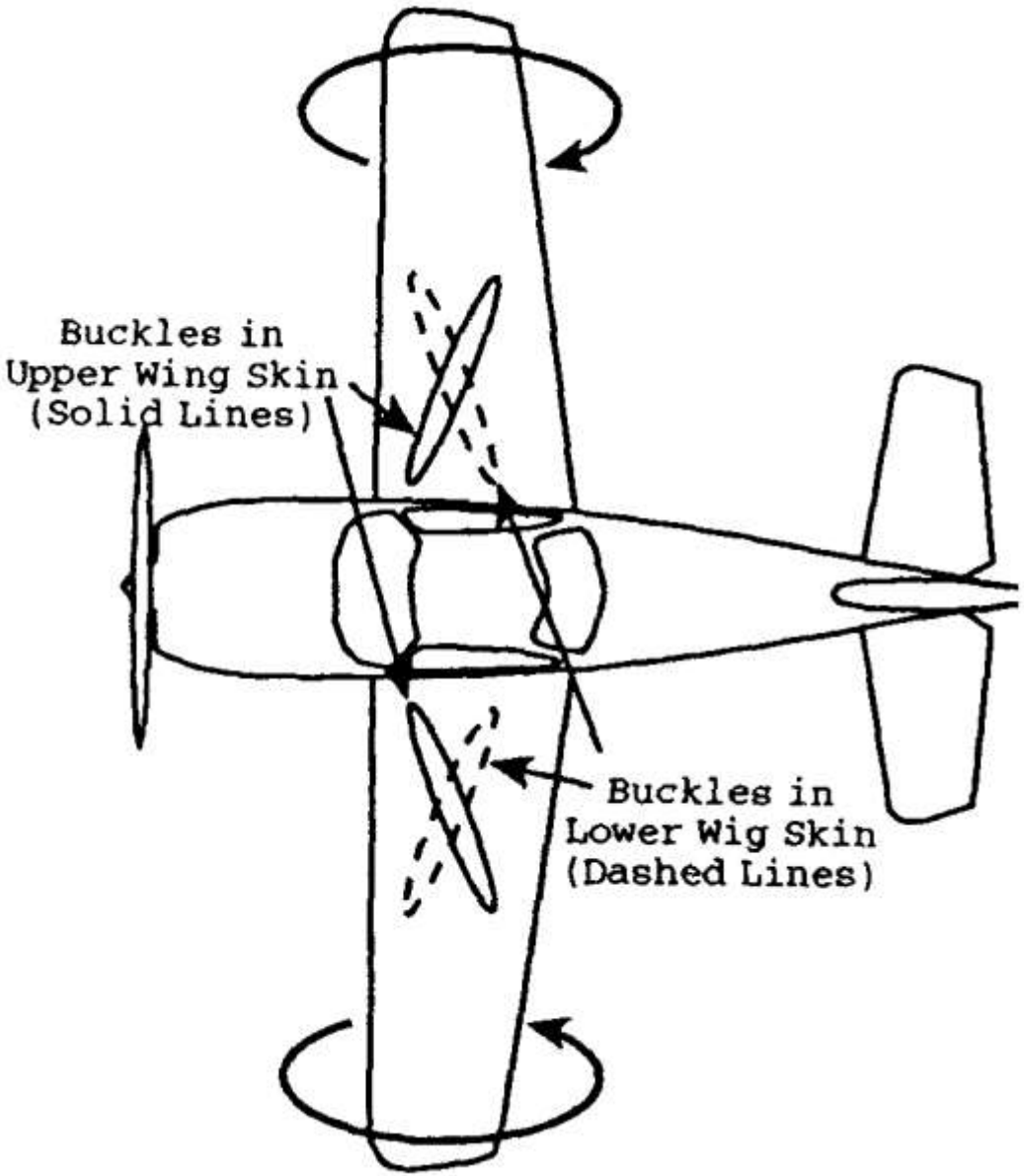

Wing Skin Buckling Consistent with Excessive Leading Edge Up Torsion.

Aerodynamic Overstress Failures

Flutter

- Airfoil lacks torsional stiffness
- Aircraft operated above V_{MO} (Max. Operating Limit Speed)
- Inertia

Evidence of Flutter

- 45 creases on upper and lower skins
- Repetitive overloads of hinges, push rods, bell cranks, control stops, etc.

Under the right combination of these three factors, self-excited oscillations of any airfoil (wings, control surfaces, stabs, or props) can result in repeated cyclic loads and deflections of the airfoils. The loads can rapidly build to levels sufficient to cause structural failure of the airfoil and in some cases destruction of the aircraft.

AIR&SPACE

Flutter Lab:

A-6 Wing Flutter Failure

www.airspacemag.com

Aerodynamic Overstress Failures

Flutter (Other possible causes)

- Improper flight control maintenance: control rigging, repairs, painting, etc.
- Ice or mud accumulation
- Water accumulation (composites)
- Loss of balance weights
- Harmonic imbalance (propeller-to-engine-to-airframe)

Failure Sequence

- Primary Failure - occurs while adjacent or associated parts are intact and subjected to high G loads
- Secondary Failure - occurs when the integrity of adjacent or associated parts are destroyed by the primary failure (i.e. the twisting failure of associated stringers within a wing or control cables tearing through skins or controls surfaces)
- Tertiary Failure - ground impact

In-Flight Break-Up Tail First

If the tail fails as a primary failure in-flight, it will most often bend downward and break off with a characteristic instantaneous overload signature. Due to loss of balance a rapid pitch down of the aircraft occurs that may then cause the wings to fail downward as a secondary failure.

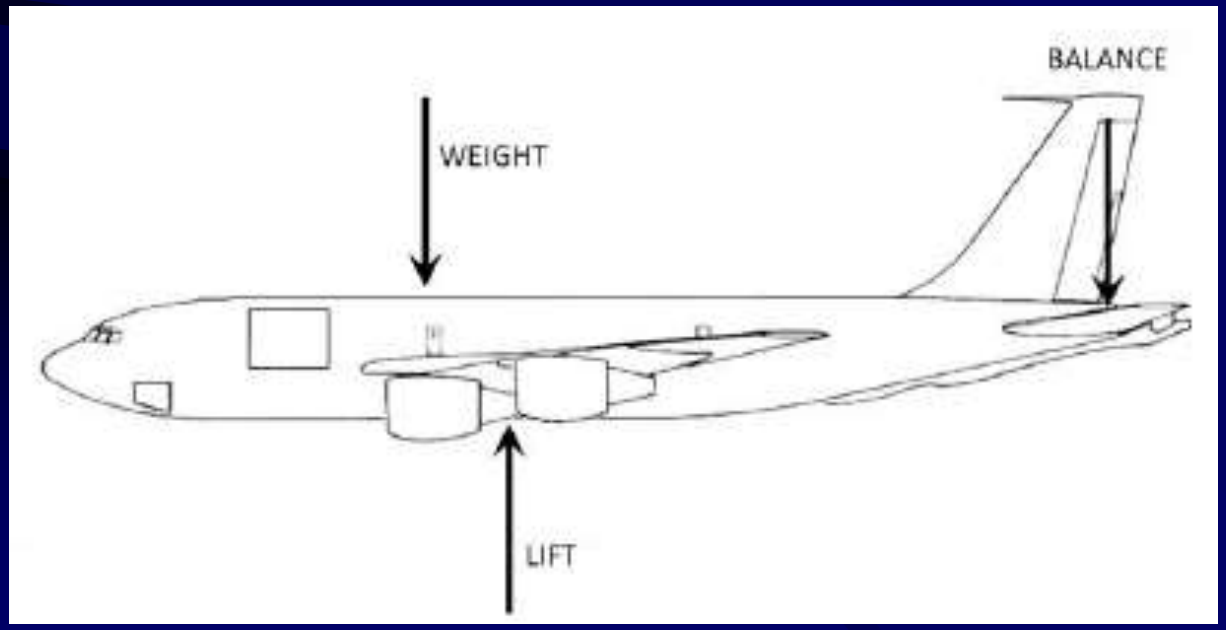

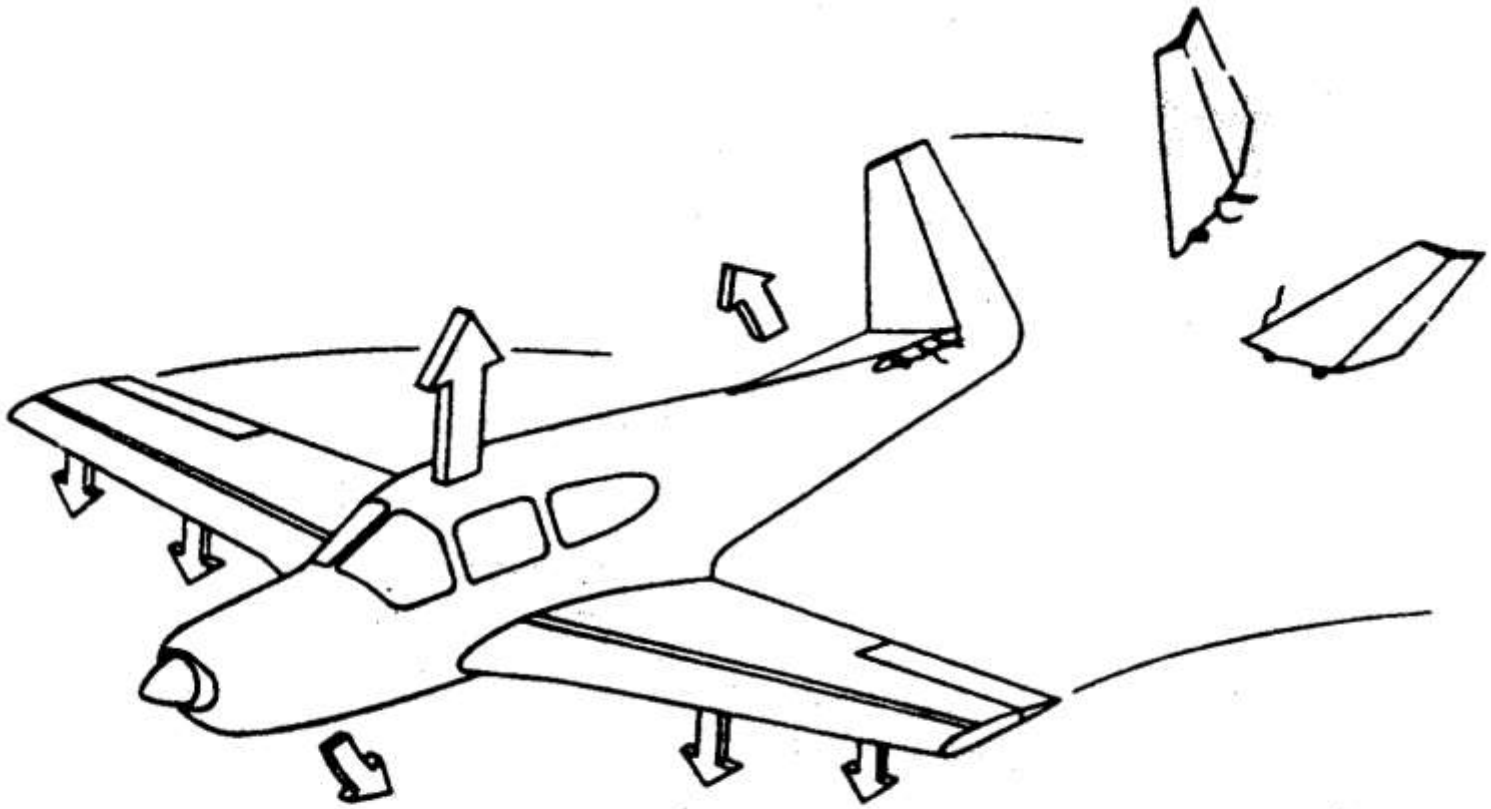

The high down loading on the tail causes downward tail failure. The loss of tail balancing load causes a rapid pitch-over and down loading on the wing.

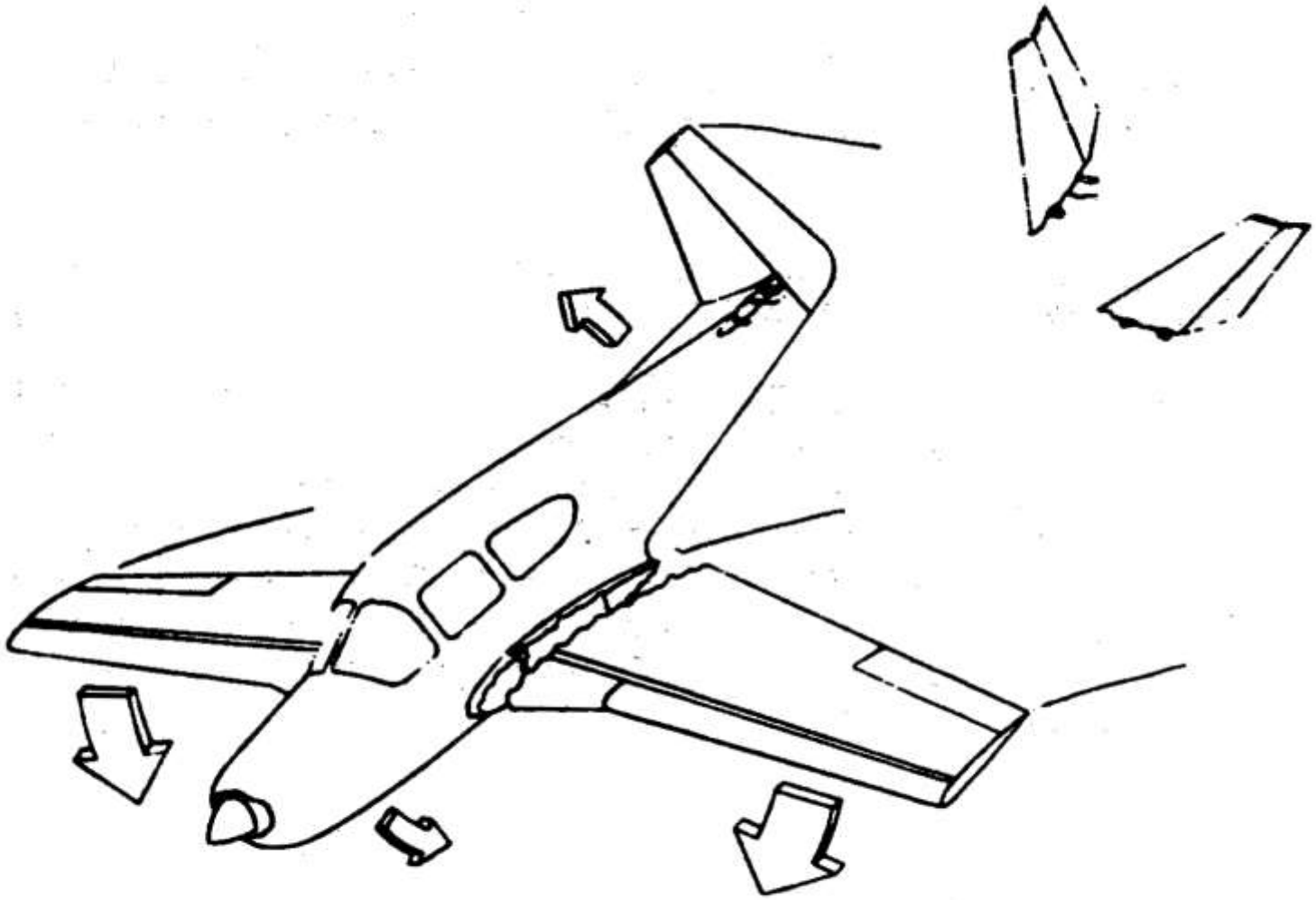

The excessive down load on the wings causes one (or both) wings to fail by down bending.

Typical Break-Up Signatures

- Missing flight controls; ailerons, elevators, rudders, etc.
- Extended debris field
- Sudden departure from controlled flight (ATC and radar data)

What happened first in the break-up?

Look for the first piece of aircraft within the debris field.

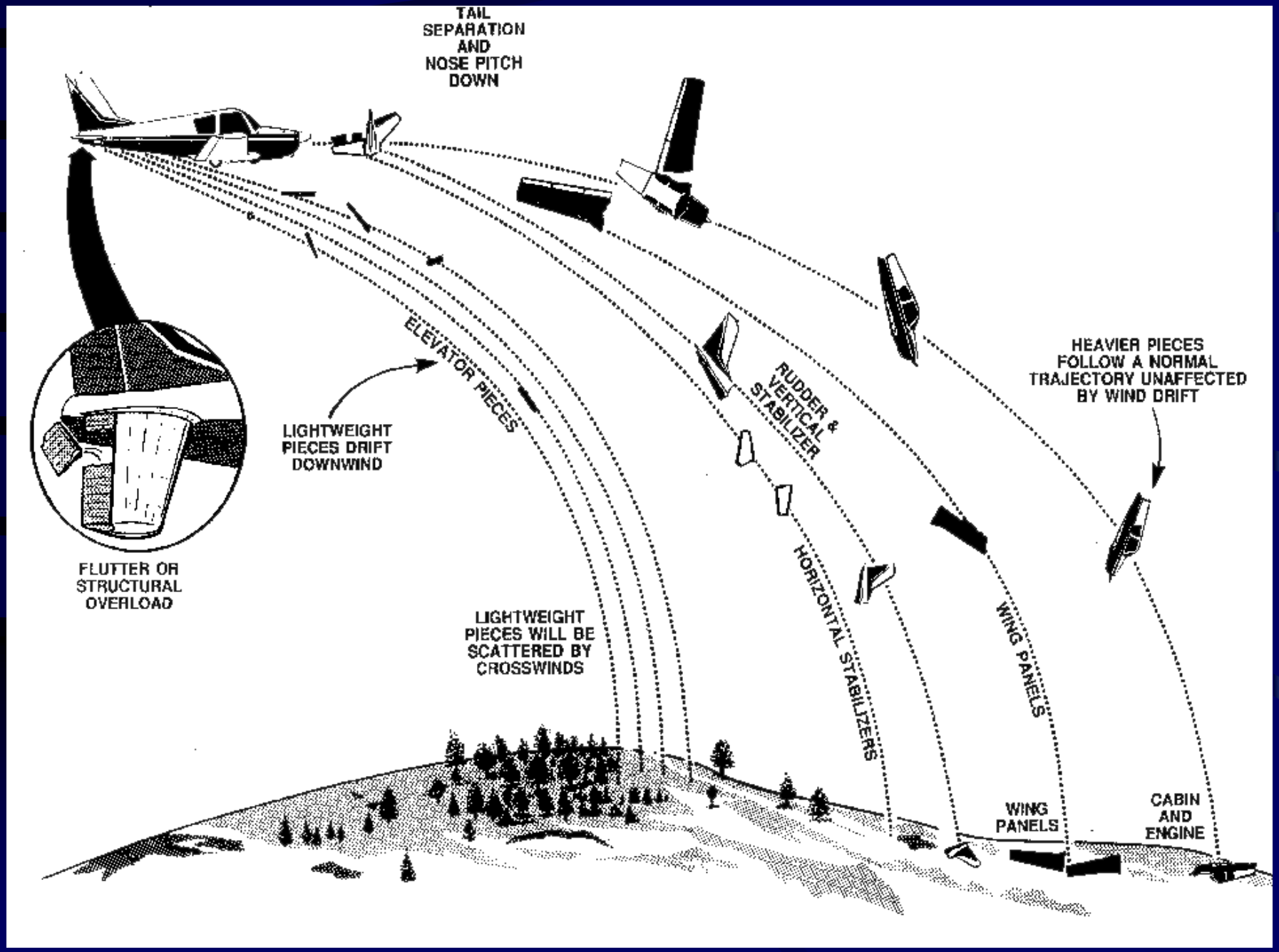
TAIL SEPARATION AND NOSE PITCH DOWN
ELEVATOR PIECES
RUDDER & VERTICAL STABILIZER
HEAVIER PIECES FOLLOW A NORMAL TRAJECTORY UNAFFECTED BY WIND DRIFT
LIGHTWEIGHT PIECES DRIFT DOWNWIND
FLUTTER OR STRUCTURAL OVERLOAD
HORIZONTAL STABILIZERS
WING PANELS
LIGHTWEIGHT PIECES WILL BE SCATTERED BY CROSSWINDS
WING PANELS
CABIN AND ENGINE

KC-135R S/N 63-8877
May 30, 2013

KC-135R S/N 63-8877
May 30, 2013

Aft Fuselage
(Tail Section of Aircraft)

KC-135R S/N 63-8877
May 3, 2013

Aft Fuselage (Two of Three Pieces)

KC-135R S/N 63-8877
May 3, 2013

Aft Fuselage (Largest Piece)

KC-135R S/N 63-8877
May 3, 2013

Aft Fuselage (Top Piece)

KC-135R S/N 63-8877
May 3, 2013

Aft Fuselage (Bottom Piece)

Aft Fuselage (Left Side)

Aft Fuselage (Right Side)

Aft Fuselage (Left Front)

Aft Fuselage (Right Front)

KC-135R S/N 63-8877
May 30-June 2, 2013

Aft Fuselage (Top Piece BS 1440 Fracture Left Hand Side)

KC-135R S/N 63-8877
May 30-June 2, 2013

Aft Fuselage (Top Piece BS 1440 Fracture Right Hand Side)

KC-135R S/N 63-8877
May 30-June 2, 2013

Aft Fuselage (Top Piece BS 1505 Fracture Right Hand Side)

KC-135R S/N 63-8877
May 30-June 2, 2013

Aft Fuselage (Top Piece BS 1505 Fracture Left Hand Side)

KC-135R S/N 63-8877
May 30-June 2, 2013

Aft Fuselage (Top Piece BS 1519 Fracture Right Hand Side)

Horizontal Stab

KC-135R S/N 63-8877
May 3, 2013

Horizontal Stabilizer

KC-135R S/N 63-8877
May 3, 2013

Horizontal Stabilizer V Shaped Skin Buckling (Upper Surface)

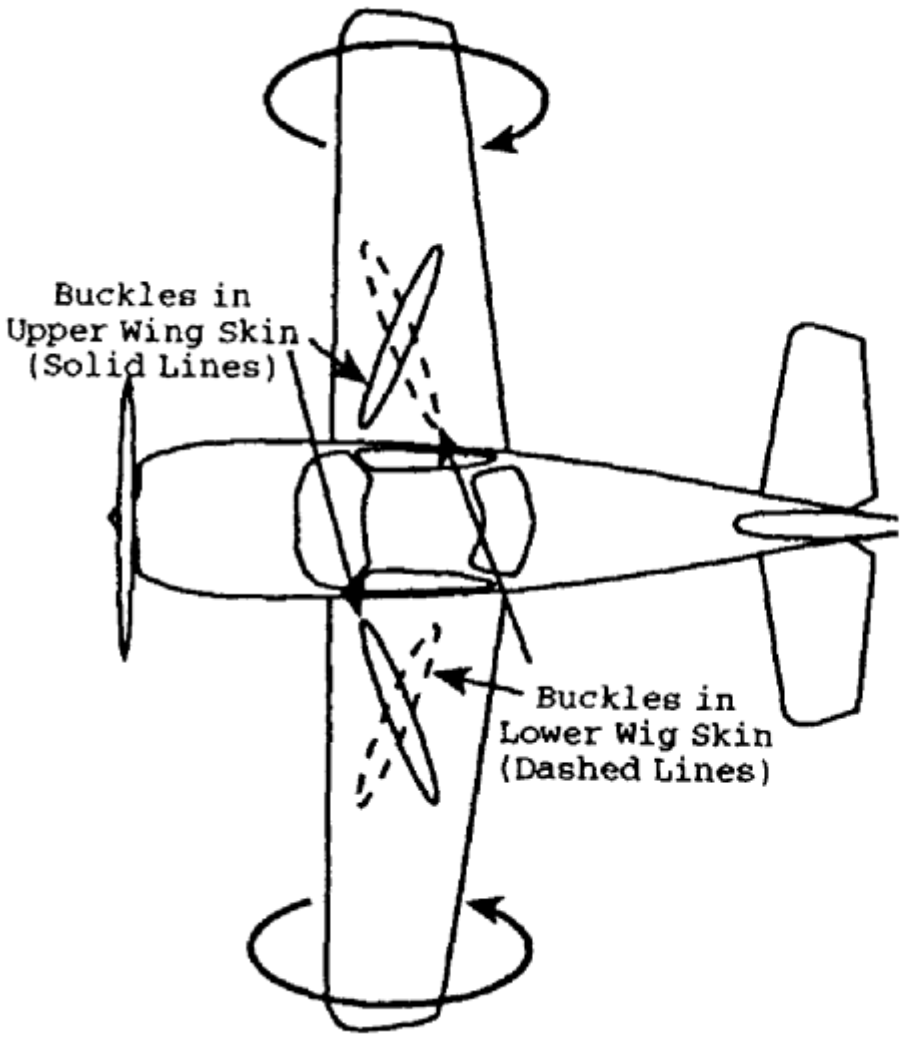

Wing Skin Buckling Consistent with Excessive Leading Edge Up Torsion.

KC-135R S/N 63-8877
May 3, 2013

Horizontal Stabilizer V Shaped Skin Buckling (Upper Surface)

Vertical Stab

KC-135R S/N 63-8877
May 3, 2013

Vertical Stabilizer

KC-135R S/N 63-8877
May 3, 2013

Vertical Stabilizer Fin Station 156 Splice Plate

KC-135R S/N 63-8877
May 30-June 2, 2013

Vertical Stabilizer Left Side

KC-135R S/N 63-8877
May 30-June 2, 2013

Vertical Stabilizer Right Side

KC-135R S/N 63-8877
May 3, 2013

Vertical Stabilizer Rudder Balance & Weight Bays

KC-135R S/N 63-8877
May 30-June 2, 2013

Rudder Balance Bay #1

KC-135R S/N 63-8877
May 30-June 2, 2013

Rudder Balance Bay #1 (ID Bottom)

KC-135R S/N 63-8877
May 30-June 2, 2013

Rudder Balance Bay #1 (ID Right)

KC-135R S/N 63-8877
May 30-June 2, 2013

Rudder Balance Bay #1 (ID Left)

KC-135R S/N 63-8877
May 30-June 2, 2013

Rudder Balance Bay #2

KC-135R S/N 63-8877
May 30-June 2, 2013

Rudder Balance Bay #2 (ID Bottom)

KC-135R S/N 63-8877
May 30-June 2, 2013

Rudder Balance Bay #2 (ID Bottom Right)

KC-135R S/N 63-8877
May 30-June 2, 2013

Rudder Balance Bay #2 (ID Bottom Left)

KC-135R S/N 63-8877
May 30-June 2, 2013

Rudder Balance Bay #2 (ID Right)

KC-135R S/N 63-8877
May 30-June 2, 2013

Rudder Balance Bay #3

KC-135R S/N 63-8877
May 30-June 2, 2013

Rudder Balance Bay #3 (ID Bottom)

KC-135R S/N 63-8877
May 30-June 2, 2013

Rudder Weight Bay #1

KC-135R S/N 63-8877
May 30-June 2, 2013

Rudder Weight Bay #1 (ID Left)

KC-135R S/N 63-8877
May 30-June 2, 2013

Rudder Weight Bay #2

KC-135R S/N 63-8877
May 30-June 2, 2013

Rudder Weight Bay #2 (ID Right)

Vertical Stab-Rudder Hinges

KC-135R S/N 63-8877
May 3, 2013

Vertical Stab-Rudder Hinge Assemblies

KC-135R S/N 63-8877
May 3, 2013

Vertical Stab-Rudder Hinge Assemblies (RS 11.685 & 48.67)

KC-135R S/N 63-8877
May 30-June 2, 2013

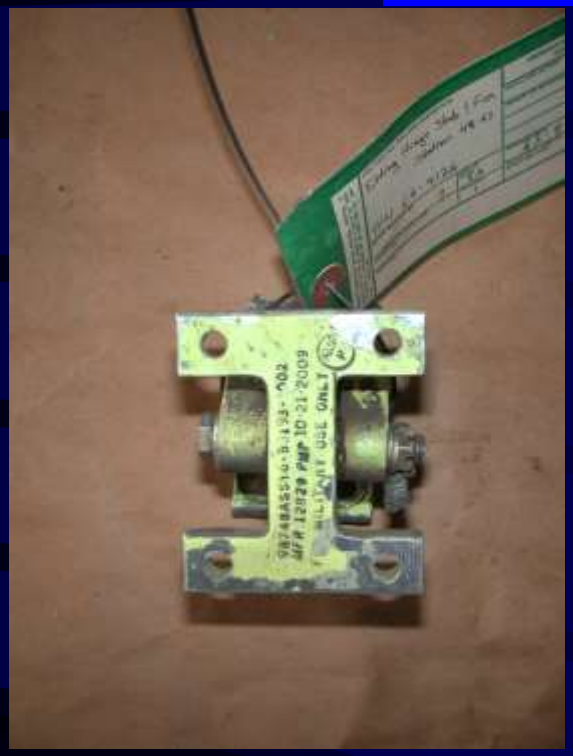

Vertical Stab-Rudder Hinge Assemblies (RS 11.685 & 48.67)

KC-135R S/N 63-8877
May 3, 2013

Vertical Stab-Rudder Hinge Assemblies (RS 93.26 &102.18)

KC-135R S/N 63-8877
May 30-June 2, 2013

Vertical Stab-Rudder Hinge Assemblies (RS 93.26 &102.18)

KC-135R S/N 63-8877
May 3, 2013

Vertical Stab-Rudder Hinge Assemblies (RS 146.18, 191.38, 235.98)

KC-135R S/N 63-8877
May 30-June 2, 2013

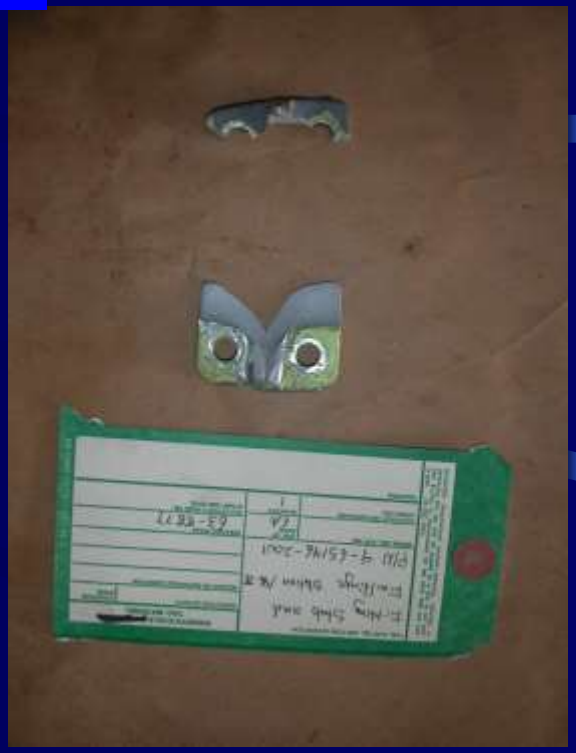

Vertical Stab-Rudder Hinge Assemblies (RS 146.18, 191.38, 235.98)

Rudder

KC-135R S/N 63-8877
May 30-June 2, 2013

Rudder (Bottom-Middle (missing)-Top)

KC-135R S/N 63-8877
May 30-June 2, 2013

Rudder (Bottom Piece RS 0-102)

KC-135R S/N 63-8877
May 30-June 2, 2013

Rudder (Missing Middle Piece RS 102-191)

KC-135R S/N 63-8877
May 30-June 2, 2013

Rudder (Top Piece RS 191-240)

KC-135R S/N 63-8877
May 30-June 2, 2013

Rudder (Bottom Piece Leading Edge)

KC-135R S/N 63-8877
May 30-June 2, 2013

Rudder Power Control Unit Control Rods & Tubes

KC-135R S/N 63-8877
May 30-June 2, 2013

Rudder (Top Piece Leading Edge)

KC-135R S/N 63-8877
May 30-June 2, 2013

Rudder (Bottom-Middle Rivet Joint Failure)

KC-135R S/N 63-8877
May 30-June 2, 2013

Rudder (Middle-Top Rivet Joint Failure)

KC-135R S/N 63-8877
May 3, 2013 1448 LT

Reference Sortie (top) flying a similar profile depicting the Roll Angle (blue) and the Drift Angle (orange). Drift Angle is a steady, non-oscillating behavior of the aircraft's nose about it's yaw axis.

Mishap Sortie (bottom) illustrating the Drift Angle (orange) as an oscillating left and right behavior of the aircraft's nose, hunting about it's yaw axis during the majority of the flight.

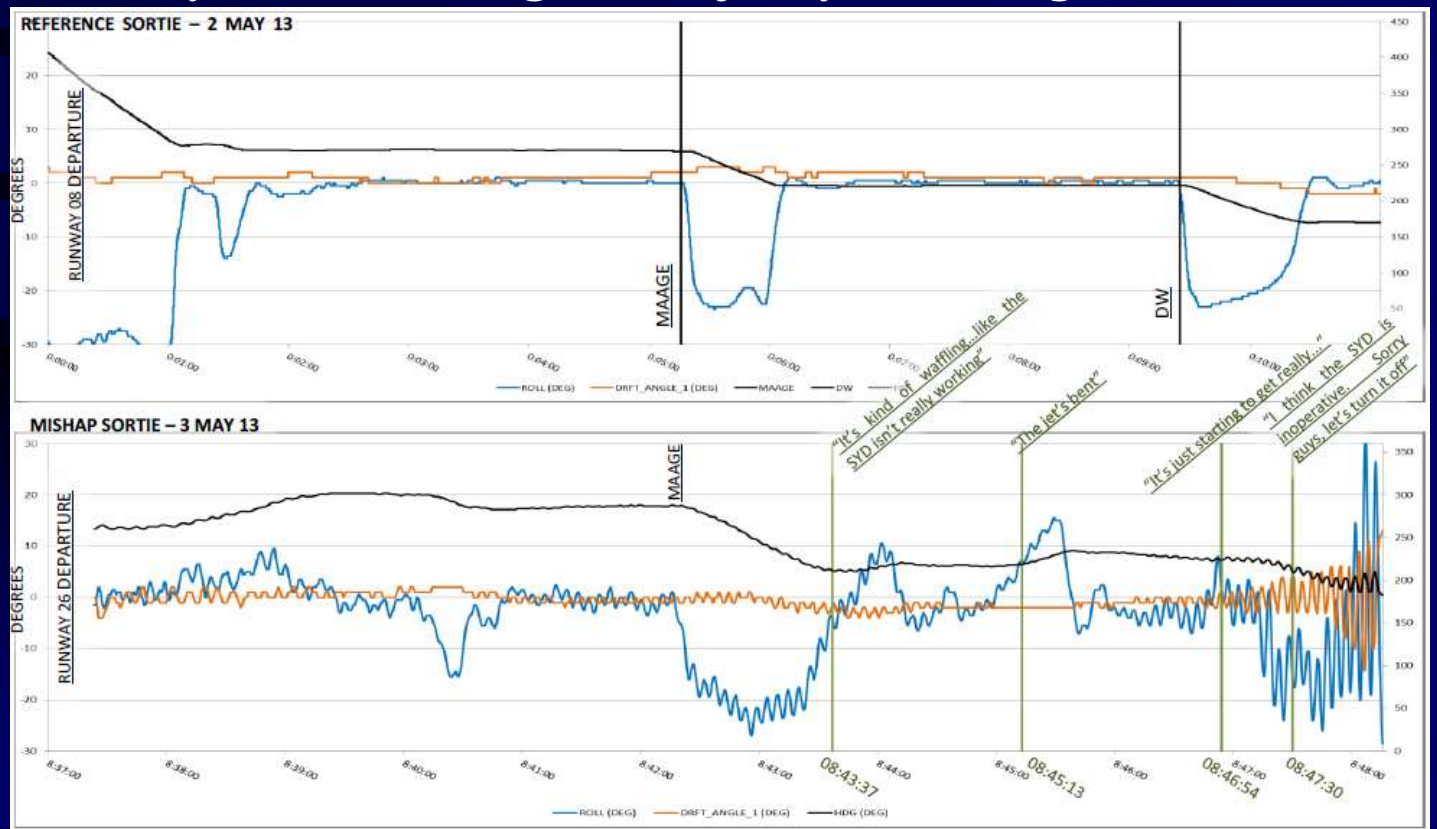

Summary of Case Study Two

On May 3, 2013, about 1448 local time, a USAF Boeing KC-135R Aerial Refueling Tanker, T/N 63-8877, assigned to the 22nd Expeditionary Air Refueling Squardron, 376th Air Expenditionary Wing, Transit Center at Manas, Kyrgyz Republic, crashed in the foothills of mountains located 6 miles south of Chaldovar, Kyrgyz Republic. The mishap aircraft's (MA) mission was to refuel coalition aircraft in Afghanistan and then return to the Transit Center at Manas. The MA exploded inflight, impacted the terrain at three main locations, and burned. The MA was completely destroyed and the mishap crew (MC), which consisted of the mishap pilot (MP), mishap co-pilot (MCP), and the mishap boom operator (MBO), perished during the accident.

The AIB determined, by clear and convincing evidence, the cause of the mishap was the MA's tail section separating due to structural overstress as a result of the MC's failure to turn off either the SYD or the rudder power and oscillating dutch roll-induced acceleration forces translating through the MP's feet as the MP used rudder during the unrecognized dutch roll condition. Additionally, by a preponderance of evidence, that the dutch roll was instigated by the MA's malfunctioning Flight Control Augmentation System that caused directional instability or rudder hunting which substantially contributed to the mishap.